**PRODUCT SPECIFICATIONS**

# SD-01: Wall Soap Dish

## STANDARD FEATURES

- Wall-mount soap dish
- Solid one-piece cast marble
- Permanently sealed surface
- Extremely sanitary
- Will not mold or mildew
- Easy to install
- Easy to maintain
- Made in the U.S.A.

## APPLICATIONS

- Sold only in conjunction with our shower systems

## ITEM NUMBER

- SD-01

CAST MARBLE
MADE IN USA

## TECHNICAL SPECIFICATIONS

| | |
|---|---|
| MODEL | SD-01 |
| TYPE | Wall Mount |
| MATERIAL | Cast Marble |
| SIZE | 6 3/4" x 3 1/2" x 5 1/2" |
| HEIGHT | 2" |
| FINISH | Matte or Gloss |
| STANDARD | Mincey Classic™ |





**CONTACT OUR SALES STAFF**

M-F: 8:00 am - 5:00 pm Eastern

**770-532-0451**

**WE'RE HERE TO HELP**

Request a product sample, color sample or get a quote.

**sales@minceymarble.com**
**samples@minceymarble.com**

 Copyright © 2000 Mincey Marble Manufacturing, Inc. ™

SD-01

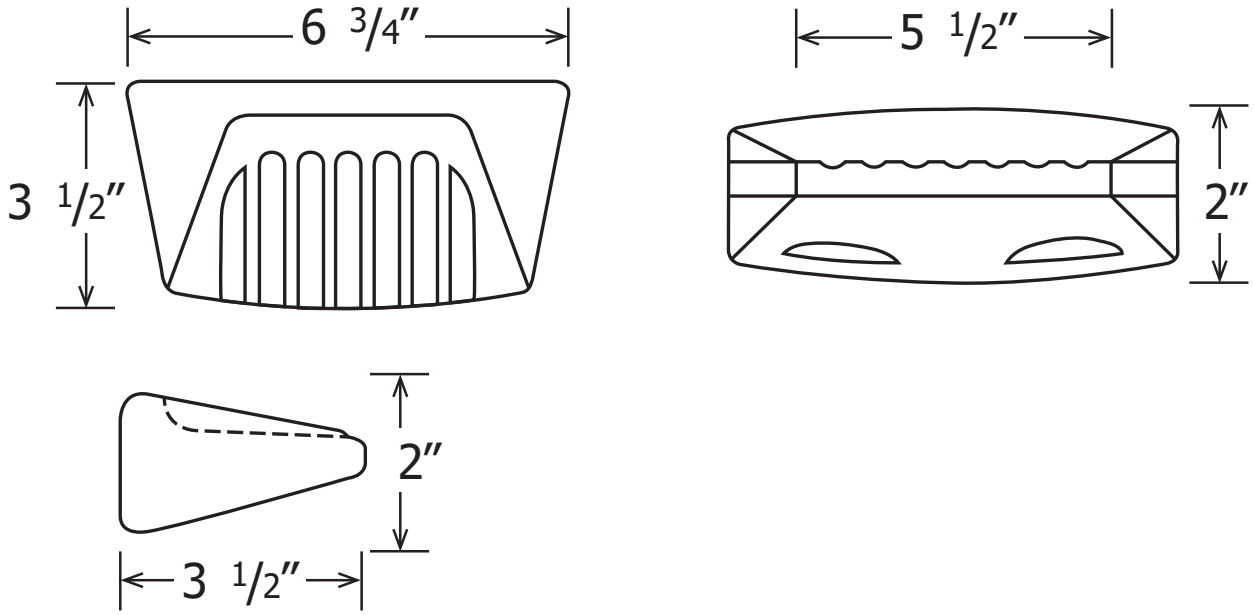


REV: 09.17.20

 Copyright © 2000 Mincey Marble Manufacturing, Inc.™